MANUFACTURER OF DOWN HOLE HAMMERS AND BITS

CHALLENGER® 100

CARE & MAINTENANCE INSTRUCTIONS

P.O. Box 348 • 646 Thompson Road • Thompson, CT 06277 USA
US Toll Free: (800) 356-NUMA • Tel: (860) 923-9551 • Fax: (860) 923-2617
E-mail: numa@numahammers.com
Website: www.numahammers.com

Patents 4,530,408 4,919,221 4,962,822 5,205,363 5,984,021 5,992,537 6,021,856 7,422,074

TABLE OF CONTENTS

MANUFACTURER OF DOWN HOLE HAMMERS AND BITS

WARRANTIES AND REMEDIES

LIMITED WARRANTY

Numa warrants that the Product will be new and free from defects in material and workmanship under normal use as contemplated by this Contract for a period of six (6) months from the date of shipment.

Except for the foregoing warranty, Numa disclaims all warranties and representations wherever made, including warranties of merchantability, durability, length of service, or fitness for a particular purpose.

Any alteration or modification of the original product without the express written consent of Numa will void this warranty.

REMEDY

If, during such warranty period, Buyer promptly notifies Numa in writing of any defect and establishes that the above warranty is not met, Numa shall either repair or replace the Product or credit the customer, as it deems necessary to meet the warranty.

Such repair, replacement, or credit of Product shall constitute complete fulfillment of Numa's obligation under this warranty, and upon the expiration of the original warranty period, all of Numa's obligations hereunder shall terminate.

LIMITATION OF LIABILITY

Numa shall not be liable to Buyer whether in contract, in tort (including negligence and strict liability), under any warranty or otherwise, for any special, indirect, incidental or consequential loss or damage whatsoever, including (without limitation) loss arising from delay, cost or capital and loss of profits or revenues. The remedies set forth in this Contract are exclusive, and the total cumulative liability of Numa under this Contract or for any act or omission in connection therewith or related thereto, whether in contract, in tort (including negligence and strict liability), under any warranty or otherwise, is limited to the price paid by Buyer for the Product.

The *WARNINGS*, *CAUTIONS* and *NOTES* used throughout the text of this instruction book are defined as follows:

WARNING	A specific procedure or practice that must be strictly followed, or a specific condition that must be met, to prevent possible bodily harm.
CAUTION	A specific procedure or practice that must be strictly followed, or a specific condition that must be met, to prevent damage to the equipment.
NOTE	Important supplemental information.

SECTION I
DESCRIPTION

GENERAL DESCRIPTION

The Challenger 100 is a valveless, pneumatically operated tool designed to utilize Numa 9-7/8" to 15" (251 mm to 381 mm) diameter bits in rock formations under a wide range of operating conditions.

The Challenger 100 hammer design incorporates a hardened, reversible case. The single bore design allows for a maximum bore diameter in conjunction with optimum life against abrasion. The simple design of the Challenger 100 provides performance and dependability without sacrificing tool life.

The Challenger 100 is designed for universal applications using air pressure from 150 PSI to 250 PSI (10.2 Bar to 17.0 Bar) with compressors having capacities of 850 CFM (401 Litres/Second) or more. When drilling conditions require supplementary hole cleaning, additional hole cleaning air can be passed through the hammer by utilizing an interchangeable choke. All standard hammers shipped from Numa have a blank choke installed. Refer to page 14 for correct choke selection and pages 7 and 11 to facilitate the removal and the installation of the choke.

Challenger 100		
Weight w/o Bit	750 lbs.	(341 kg)
Outside Diameter	9"	(229 mm)
Hammer Length:		
Shoulder to Shoulder	59"	(150 cm)
Shoulder to Bit Face	66"	(168 cm)
Backhead API Thread	6-5/8 API REG	

Table 1-1 General Hammer Specifications

9-7/8"	(251 mm)	210 lbs.	(96 kg)	12"	(305 mm)	285 lbs.	(129 kg)
10"	(254 mm)	224 lbs.	(102 kg)	13"	(330 mm)	290 lbs.	(132 kg)
10-5/8"	(270 mm)	235 lbs.	(107 kg)	14"	(356 mm)	355 lbs.	(161 kg)
11"	(280 mm)	242 lbs.	(110 kg)	15"	(381 mm)	377 lbs.	(171 kg)

Table 1-2 General Bit Specifications

NOTE

NUMA 9-7/8" TO 15" (251 MM TO 381 MM) BITS ARE AVAILABLE IN CONCAVE FACE DESIGN WITH LARGE AIR FLUSHING HOLES AND CHIP WAYS TO TAKE ADVANTAGE OF THE CHALLENGER 100 PERFORMANCE. OTHER SIZES MAY BE AVAILABLE UPON REQUEST.

FUNCTIONAL DESCRIPTION

1. BACKHEAD

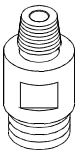

The backhead connects the hammer to the drill rod. It is threaded into the top end of the case with a large cross section thread form and into the drill rod with a standard 6-5/8 API REG pin thread. Wrench flats are provided for disassembling.

2. CHECK VALVE

The check valve maintains pressure in the hammer when the air supply has been shut off. The pressure in the hammer balances the hydrostatic pressure in the hole thereby preventing contaminants from entering the hammer.

3. CHECK VALVE SPRING

The check valve spring provides tension under the check valve to keep it closed. It is compressed as the air is turned on.

4. CHECK VALVE HOUSING

The check valve housing guides the check valve and the check valve spring. The main air supply is directed to the feed tube through ports located in the check valve housing.

5. COMPRESSION RINGS

Two compression rings, one between the check valve housing and the feed tube housing, and one between the feed tube and the retaining plate, keep the internal hammer parts tight.

6. FEED TUBE HOUSING

The feed tube housing is aligned in the main bore of the hammer. It is located by a snap ring that is inserted in the main bore and is held in position by the backhead, check valve housing and compression ring combination. The feed tube housing locates and aligns the feed tube.

7. FEED TUBE

The feed tube supplies the main air into the chambers located in the piston. It seats on a shoulder in the feed tube housing and is designed with a long bearing surface to maintain alignment in the feed tube housing.

8. CHOKE

The interchangeable choke is located in the tip of the feed tube and is held in place with a press fit. A set of four chokes is supplied with each hammer. By installing the correct choke, the hammer can be fine tuned to the compressor package.

9. SNAP RINGS

Two snap rings position the internal parts in the hammer. The upper snap ring locates the feed tube housing and the lower snap ring locates the bit bearing.

10. PISTON

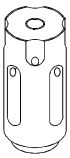

The piston functions as the only moving part in the hammer, controlling the operational air cycle. The percussive action of the piston striking the bit transfers the energy through the bit in order to fracture rock formations.

11. CASE

The case is designed to contain the internal parts which make up the hammer assembly. The case is reversible and hardened to resist wear and to extend life in abrasive conditions. Wrench flats are provided for disassembling.

12. BIT BEARING

The bit bearing guides the bit to insure proper alignment between the piston and the bit. The bit bearing is pressed into the chuck end of the case to provide a seal for the main air supply. The bit bearing is located by a snap ring which is inserted in the main bore.

13. BIT RETAINING RINGS

The bit retaining rings are designed to allow the bit to move between the drilling and cleaning positions and prevent the bit from coming completely out of the hammer. The bit retaining rings consist of two matched halves and are held together with the bit retaining ring o-ring.

14. CHUCK

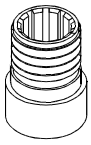

The chuck threads into the bottom end of the case with a large cross section thread form. It has internal splines that transmit rotation to the bit through a set of delrin drive plates. Wrench flats are provided for disassembling.

15. THRUST WASHERS

Two thrust washers, one located between the backhead and the case, and one between the chuck and the case, provide for easy disassembly. Brass thrust washers are available as an optional extra.

16. CHUCK BUSHING

The chuck bushing is a nylon insert located in the bottom end of the chuck to provide a bearing surface between the lower bit shank and chuck.

17. DRIVE PLATES

The plastic drive plates provide wear protection for the splines. They are inserted between the chuck and the bit. A complete drive plate set is provided with each bit.

SECTION II
MAINTENANCE

DISASSEMBLY

- **If at all possible, the backhead and chuck should be broken loose on the drill rig; this is much easier than trying to do so after the drill has been removed from the drill rig.**

CAUTION

USE CAUTION WHEN HANDLING DOWN HOLE HAMMER PARTS. NUMA HAMMER PARTS ARE MANUFACTURED FROM HARDENED, HEAT TREATED MATERIALS. DROPPING OR STRIKING THESE PARTS MAY CAUSE SEVERE DAMAGE. STRIKING THE HAMMER PARTS WITH HAMMERS, CROWBARS OR LIKE INSTRUMENTS WILL VOID THE WARRANTY.

- **Maintenance should be performed in a clean environment.**
- **Tools needed: appropriate hammer lifting device, hammer stand, chain vise, 2" (51mm) diameter brass rod, snap ring pliers, press, a drift pin and a small screwdriver.**
- **Clean the outside of the hammer. This will insure a good surface to clamp on.**
- **Using an appropriate lifting device, place the hammer horizontally on a hammer stand and secure the hammer with a chain vise. Place the chain vise on the area of the case where the bit bearing is housed when working on the chuck end of the hammer. When working on the backhead end of the hammer, place the chain vise on the area of the case where the check valve housing is located.**

CAUTION

THE ACCEPTABLE CLAMPING AREAS START 5" (127MM) FROM EITHER CASE END, TO AN ADDITIONAL 5" (127MM) BEYOND THIS POINT. PLACING THE CHAIN VISE ON THE AREA OF THE CASE WHERE THE PISTON CYCLES CAN DISTORT THE CASE, RESTRICT PISTON MOVEMENT AND VOID THE WARRANTY.

- **Unscrew and remove the backhead from the case. Remove the backhead o-ring and thrust washer from the backhead.**
- **Remove the check valve, the check valve spring and the check valve housing from the backhead end of the case.**
- **Remove the compression ring from the base of the check valve housing.**

- **Unscrew and remove the chuck, drive plates, bit and the bit retaining rings from the case.**

- **Remove the bit retaining rings o-ring from the bit retaining rings.**

- **Remove the thrust washer from the chuck.**

- **Removal of the chuck bushing is not necessary for routine maintenance. If necessary, lay the chuck on its side so that the bit end is facing you. Locate the seam in the chuck bushing. Insert a screwdriver into the slot in the middle of the seam and pry the chuck bushing from the under cut. Remove the chuck bushing from the bit end of the chuck.**

- **Using a 2" (51mm) diameter brass rod, slide the piston against the feed tube assembly and push the feed tube assembly and snap ring out the backhead end of the case.**

- **Slide the piston out the backhead end of the case.**

- **Removal of the bit bearing and snap ring in the chuck end of the case is not necessary for routine maintenance. If necessary, insert the bit bearing press plate into the backhead end of the case, with the smaller diameter toward the case bore. Using a 2" (51mm) diameter brass rod, slide the bit bearing press plate to the chuck end of the case until it rests against the bit bearing. Remove the brass rod. Using a press, apply pressure to the bit bearing press plate and force the bit bearing and snap ring out of the chuck end of the case. Refer to figure 2-1 for bearing spacer dimensions.**

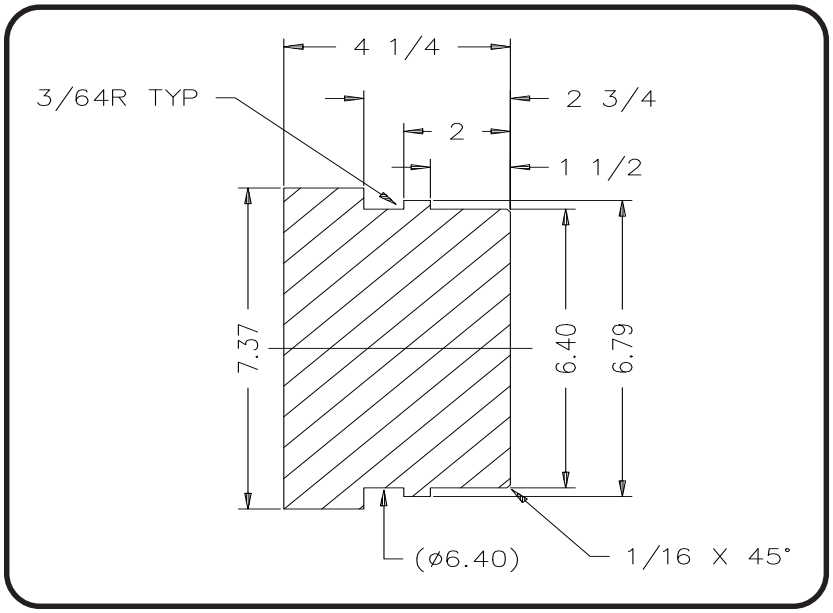

N100 Bearing Spacer/Press Plate
Figure 2-1

- **Disassembly of the feed tube assembly is not necessary for routine maintenance. If necessary, use snap ring pliers to remove the feed tube snap ring. With the choke end of the feed tube against the work bench, apply downward pressure on the feed tube and toward the work bench. This will cause the feed tube to protrude from the backhead end of the feed tube housing. Remove the feed tube retaining plate and feed tube compression ring from the collar end of the feed tube. Grasp the feed tube and slide it out the feed tube housing. Place the feed tube collar toward the work bench. Using a drift pin, tap the choke from the feed tube pressing diameter. The choke will fall out the collar end of the feed tube. Using a small screwdriver, pick the two feed tube o-rings from the feed tube housing.**

INSPECTION

- **All parts should be washed in a clean solvent before they are inspected and reassembled.**

> **WARNING**
> **USE CLEANING FLUIDS THAT ARE NONFLAMMABLE AND AVOID BREATHING THE FLUID VAPORS.**

- **Handle all parts carefully, hardened parts may chip if dropped on a hard surface.**

BACKHEAD

- **Inspect the threads for cracks and burrs.**
- **Remove all burrs on the thread with a fine file.**
- **Replace if necessary.**

CHECK VALVE

- **The check valve should be smooth and free from abrasions.**
- **Replace if necessary.**
- **Replace the check valve spring if it is worn or broken.**

FEED TUBE ASSEMBLY

- **Inspect the outside diameter for nicks, burrs and scoring.**
- **Inspect all makeup surfaces for indentations or nicks caused by wear.**
- **Remove all minor irregularities with emery cloth.**
- **Inspect the choke to insure it is properly seated**
- **Replace if necessary.**

SNAP RINGS

- **Inspect the snap rings for severe wear indications**
- **Replace if necessary.**

PISTON

- Inspect the striking face, inside and outside diameters for nicks, scoring and cracks.
- Polish the piston with emery cloth to remove all minor irregularities, cracked pistons should be replaced.
- Wash the piston thoroughly, inside and out, to remove all emery dust.

CASE

- Inspect the outside diameter for excessive wear or cracks. Inspect the internal case bore for scoring.
- Remove all minor irregularities with fine honing stones.
- Clearance between the piston and the case should not exceed 0.020" (0.51 mm).
- Select the larger end of the case to be the chuck end. Replace if the outside diameter is worn to 8.375" (213 mm) or less near the chuck end.

BIT BEARING

- Inspect the inside and outside for nicks and burrs.
- Remove all internal irregularities with a fine honing stone.
- Remove all external irregularities with an emery cloth.
- Clearance between the bit shank and bit bearing should not exceed 0.020" (0.51 mm).
- Replace if necessary.

BIT RETAINING RINGS

- Inspect for cracks or deformations.
- Remove all irregularities with a file or emery cloth.
- Replace if necessary.

THRUST WASHERS

- **Inspect for damage such as cracks.**
- **Replace if necessary.**

CHUCK

- **Inspect for cracks and burrs.**
- **For continued use, the outside diameter should be larger than the outside of the case or the same. Collar length should not be less than 4.375" (111 mm).**

> **CAUTION**
>
> **IF THE COLLAR LENGTH IS LESS THAN 4.375" (111 MM) AND THE BIT IS UNDER LOAD CONDITIONS, CONTACT BETWEEN THE SHOULDER OF THE BIT RETAINING RINGS AND THE BOTTOM OF THE BIT RETAINING RING AREA ON THE BIT, COULD CAUSE THE BIT TO FAIL IN THIS AREA.**

- **Torsional play in the splines should not exceed 0.175" (4.45 mm).**
- **Replace if necessary.**

O-RINGS

- **Inspect for damage such as cracks and deformations.**
- **Replace if necessary.**

GENERAL ASSEMBLY INSTRUCTIONS

- **Assembly should be performed in a clean environment.**
- **All parts should be cleaned thoroughly and wiped dry before assembly.**
- **Oil all parts by hand using Rock Drill Oil to insure easy assembly.**
- **Coat all thread connections with a thread compound to allow joints to thread easily.**

FEED TUBE ASSEMBLY

- **Install the two feed tube o-rings in the two grooves located in the smallest inside diameter of the feed tube housing.**

- **With the smaller diameter of the choke toward the collar end of the feed tube bore, slide the choke all the way to the pressing diameter. Using a long drift pin, tap the choke into the pressing diameter.**

- **Position the piston vertically on the work bench. Place the smallest outside diameter of the feed tube housing on the piston so that the bores will align. Insert the choke end of the feed tube into the feed tube housing. Slide the feed tube in the feed tube housing until the collar rests against the feed tube housing shoulder. Slide the feed tube compression ring over the collar end of the feed tube until it seats against the feed tube collar. Slide the retaining plate over the collar end of the feed tube until it rests against the compression ring. While applying pressure to the retaining plate to expose the snap ring groove, use snap ring pliers to insert the feed tube snap ring. Remove the feed tube assembly from the piston.**

HAMMER ASSEMBLY

- **Select the larger outside diameter end of the case to be the chuck end.**

- **Insert the snap ring into the groove located nearest to the chuck end of the case, making sure it seats properly in the groove. Press the bit bearing into the chuck end of the case. Make sure the bit bearing is in contact with the snap ring.**

- **Install the thrust washer against the shoulder of the chuck threads and insert the chuck bushing in the ID under cut of the chuck. With the bit face down, place the chuck over the top of the bit. Align the splines and lower the chuck completely onto the bit. Rotate the chuck counterclockwise until the splines meet and insert the drive plates between the chuck and the bit splines. See Figure 2-2.**

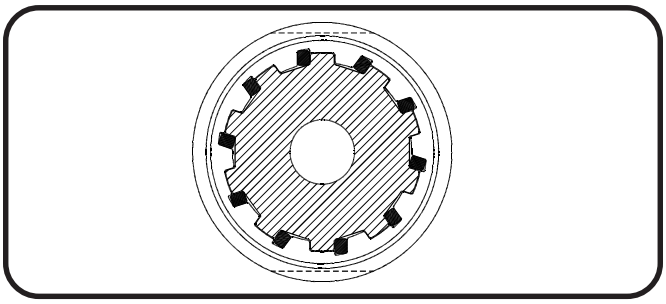

N100 Drive Plate Positioning as Viewed from Top
Figure 2-2

- Slide the piston in the backhead end of the case. Push the piston all the way to the chuck end. The piston should ride in the case very smoothly.
- Install the snap ring in the groove farthest from the backhead end of the case, making sure it seats properly in the groove.
- Install the feed tube assembly into the backhead end of the case, making sure it is firmly against the snap ring. Due to close tolerances, caution is advised when inserting the feed tube, it should not be forced into the case.
- Install the compression ring around the shoulder of the check valve housing.
- Install the check valve housing into the case, pushing it against the feed tube housing and compression ring.
- Place the check valve spring into the check valve housing then insert the check valve into the check valve housing.
- Place the thrust washer against the backhead thread shoulder. Install the backhead o-ring into the groove on the backhead. Screw the backhead into the case and hand tighten down.
- Place the bit retaining rings on top of the chuck, around the bit shank, and secure with the bit retaining rings o-ring.
- Using an appropriate lifting device, lower the hammer assembly over the chuck/bit assembly. Thread the chuck/bit assembly into the case and hand tighten. The chuck should shoulder against the thrust washer and case, with no gap present.

CAUTION

DUE TO THE CLOSE TOLERANCES BETWEEN THE CHALLENGER 100 INTERNAL PARTS AND THE CASE, NUMA CAN NOT ACCEPT RESPONSIBILITY FOR DAMAGE CAUSED BY WELDING ON THE CASE OD. WELDING ON THE CASE CAN CREATE DISTORTION, CAUSE PREMATURE FAILURE AND VOID THE WARRANTY. CONTACT NUMA FOR SPECIAL INSTRUCTIONS IF WELDING THE CASE BECOMES UNAVOIDABLE.

SECTION III
PARTS IDENTIFICATION
EXPLODED VIEW

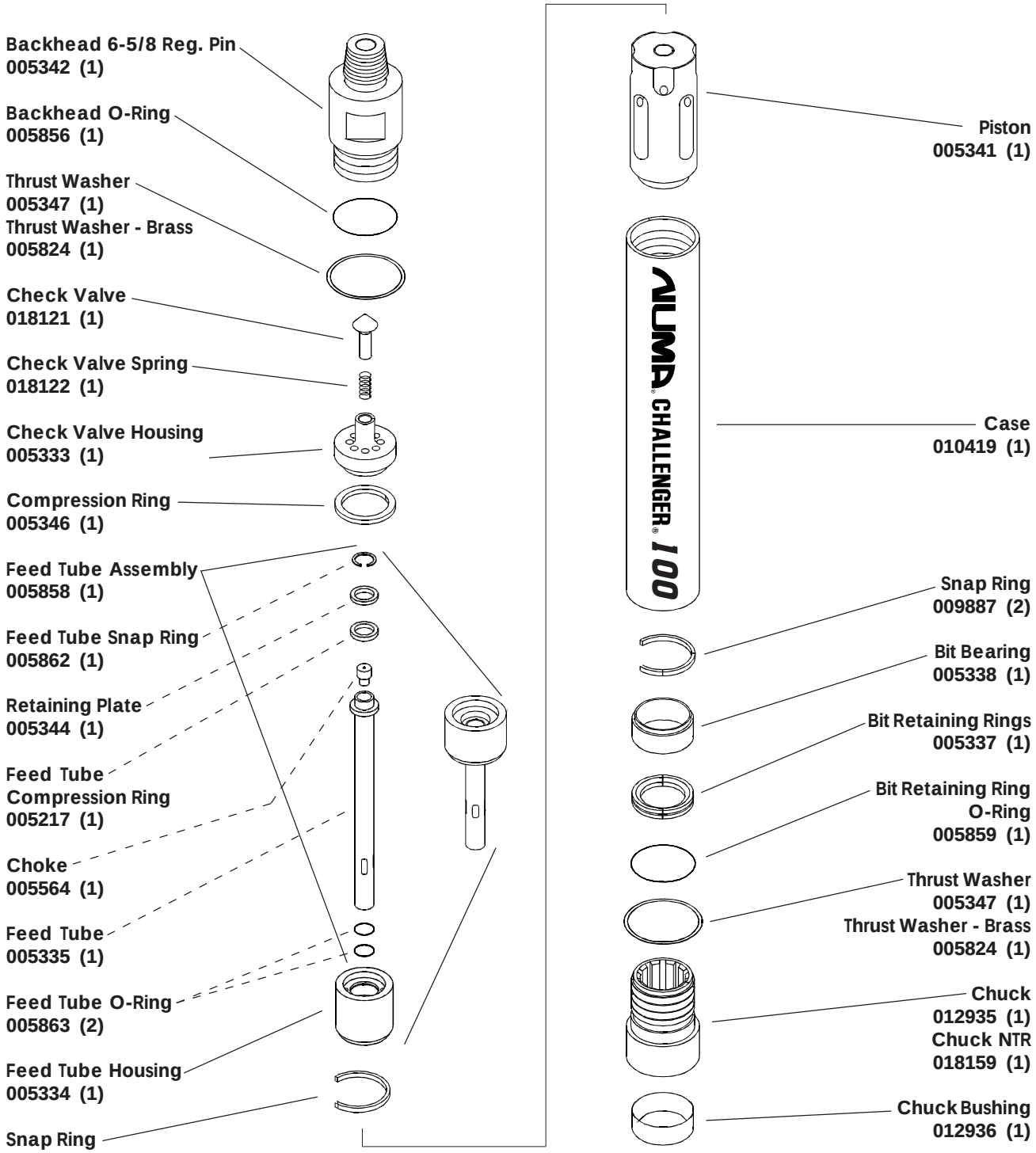

HAMMER ASSEMBLY #010523
NTR HAMMER ASSEMBLY #018945
Figure 3-1

SECTION IV
AIR CONSUMPTION CHART
CHALLENGER 100

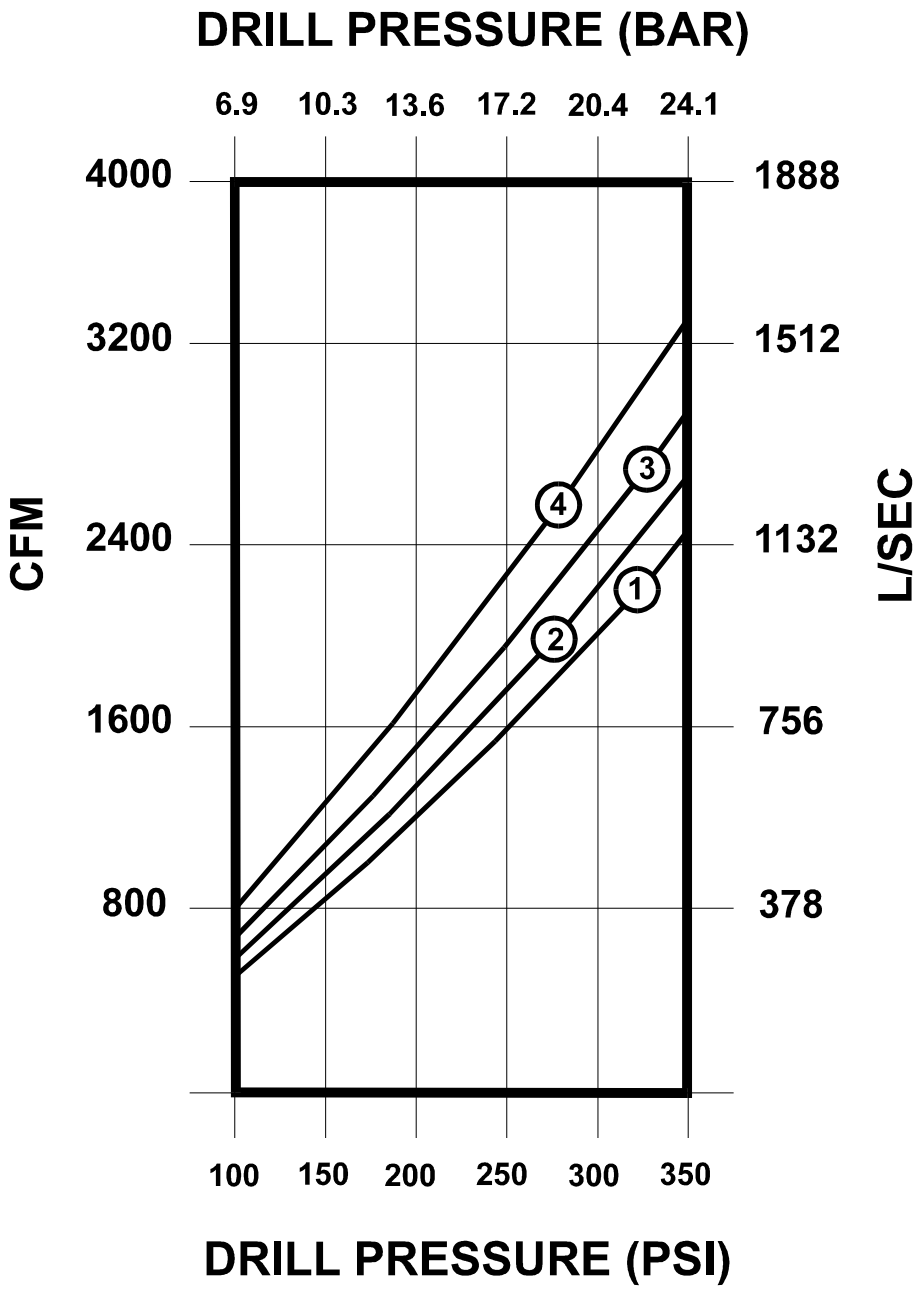

(1) SOLID CHOKE
(2) 1/4 (6.4mm) CHOKE
(3) 3/8 (9.5mm) CHOKE
(4) 1/2 (12.7mm) CHOKE

**** Operation Above 250 PSI (17 BAR) Is Not Recommended.***

SECTION V
LUBRICATION

The Challenger 100 hammer requires a continuous supply of the correct type Rock Drill Oil. The Challenger 100 hammer consumes at least 4 quarts (4 litres) of Rock Drill Oil per hour in order to maintain adequate lubrication. See table 5-1 for recommended Rock Drill Oil.

	Medium SAE 30	Heavy SAE 50
Shell	Air Tool Oil S2 A 150	Air Tool Oil S2 A 320
Texaco / Caltex	Rock Drill Lube 100	Rock Drill Lube 320
Chevron	Vistac 150	Vistac 320
Conoco	Conoco 150	Conoco 320
Numa Bio Blend	RDP 150	RDP 320

Table 5-1
Recommended Rock Drill Oil

CAUTION

ROCK DRILL OILS ARE THE ONLY ACCEPTABLE LUBRICANTS. SAE 50 ROCK DRILL OIL SHOULD BE USED IN AMBIENT TEMPERATURES OF 80° FAHRENHEIT (27° CELSIUS) OR HIGHER. CONTACT NUMA FOR ACCEPTANCE OF ALTERNATIVE ROCK DRILL LUBRICANTS.

CAUTION

THE CHALLENGER 100 HAMMER, AS WITH ANY MACHINE, REQUIRES CONTINUOUS LUBRICATION. THE FAILURE TO SUPPLY ADEQUATE LUBRICATION TO THE HAMMER CAN CAUSE PREMATURE FAILURE AND MAY VOID THE WARRANTY.

SECTION VI
STORAGE

When storing a Challenger hammer, it is important to take the necessary steps in order to insure a smooth operation after restarting.

When the hole is completed and the hammer is to be inactive for several weeks or longer the following steps should be followed:

Each drill rod should be blown clear of all water. During this process, turn on the in line lubricator and blow until the rock drill oil can be seen from the bottom end of each drill rod. In addition, each rod (pin and box end) should be wiped clean and capped to prevent foreign contaminants from sticking to the connector ends.

SHORT TERM STORAGE

When the Challenger hammer will be stored for only a short period of time the following steps should be taken:

- Blow the hammer clear of all water.
- Pour one cup of Rock Drill Oil into the backhead.
- Turn the air on and cycle for 10 seconds. This will lubricate the internal parts.
- Cap the backhead and chuck end.
- Store the hammer horizontally in a dry environment.

LONG TERM STORAGE

When the Challenger hammer will be stored for only a long period of time the following steps should be taken:

- Blow the hammer clear of all water.
- If at all possible, the backhead and chuck should be broken loose on the drill rig, this is much easier than trying to do so in the shop.
- Disassemble the hammer.
- Inspect and wipe all the parts clean.

- Lubricate all the internal parts with Rock Drill Oil. See table 5-1 on page 15 for suitable Rock Drill Oils.
- Cap the backhead and chuck ends.
- Store the hammer horizontally in a dry environment.

RESTARTING

Before restarting the hammer after prolonged periods of inactivity, disassemble and inspect all internal hammer parts.

If any internal hammer parts have oxidized, use an emery cloth to polish each part. Wash each hammer part, wipe dry, relubricate with rock drill oil and reassemble the hammer.

CAUTION

FAILURE TO CHECK INTERNAL PARTS BEFORE RESTARTING THE HAMMER MAY CAUSE SERIOUS DAMAGE TO THE HAMMER.

SECTION VII
BUTTON BIT MAINTENANCE

GENERAL

Numa button bits are designed for fast penetration and long life. Keeping the carbide buttons sharp has a direct effect on both the penetration and the tool life.

As the bit wears flat, spots develop on the carbide buttons. These flat spots increase stress on the buttons causing the bit to work harder, which may cause button failure. Bit sharpening can minimize these problems.

Gauge buttons will usually show the most wear and should be used to determine the frequency of bit sharpening. When the flats on the gauge buttons become a maximum of 1/8" (3 mm) wide it is time to resharpen. Refer to figure 7-1.

SHARPENING

The following tools are required to resharpen the bit:

- Hand grinder (20,000 r.p.m.)
- Silicon carbide wheel 1" (25 mm) diameter, 60 - 80 grit
- Bit stand
- Pencil

Place a mark on the center of the button flat. Grind the button to its original shape leaving the mark untouched. Refer to figure 7-1. It is important to leave the center of the flat untouched to insure concentricity.

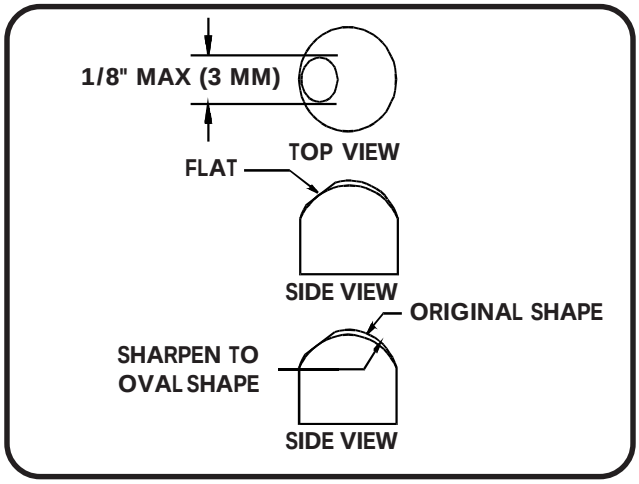

Button Resharpening
Figure 7-1

SECTION VIII
RECOMMENDED SPARES
CHALLENGER 100

Product Description	Part Number	Class 1	Class 2
Backhead 6-5/8 Reg. Pin	005342	0	1
Backhead O-Ring	005856	2	4
Thrust Washer	005347	4	6
Check Valve	018121	1	2
Check Valve Spring	018122	1	2
Check Valve Housing	005333	0	1
Compression Ring	005346	1	2
Feed Tube Assembly	005858	1	2
Feed Tube Snap Ring	005862	1	2
Retaining Plate	005344	0	1
Feed Tube Compression Ring	005217	1	2
Choke Blank	005564	0	1
Feed Tube	005335	1	2
Feed Tube O-Ring	005863	2	4
Feed Tube Housing	005334	0	1
Snap Ring	009887	1	2
Piston	005341	0	2
Case	010419	0	1
Bit Bearing	005338	0	1
Bit Retaining Rings	005337	1	2
Bit Retaining Ring O-Ring	005859	1	2
Chuck	012935	1	2
Chuck Bushing	012936	1	2
Choke Set	007121	1	2
Choke Blank - installed in hammer	005564	0	1
Choke 1/4"	007122	0	1
Choke 3/8"	008045	0	1
Choke 1/2"	007123	0	1
Alternate Parts			
Thrust Washer - Brass	005824	4	6
Chuck NTR	018159	1	2

For Complete Hammer Assembly #010523 / NTR #018945
Table 8-1

NOTE

Class 1 Represents a user of a Challenger 100 hammer that has readily available spare parts.

Class 2 Represents a user of a Challenger 100 hammer that does not have readily available spare parts.

NOTES