MANUFACTURER OF DOWN HOLE HAMMERS AND BITS

POSITIVE DISPLACEMENT

LUBRICATORS

CARE AND MAINTENANCE INSTRUCTIONS

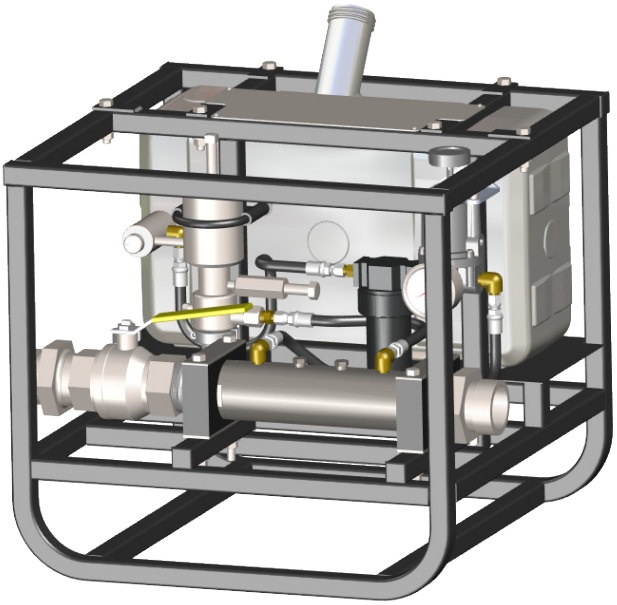

P.O. Box 348 • 646 Thompson Road • Thompson, CT 06277 USA
Tel: (860) 923-9551 • Fax: (860) 923-2617
E-mail: numa@numahammers.com
Web Site: www.numahammers.com

TABLE OF CONTENTS

WARRANTIES AND REMEDIES

LIMITED WARRANTY

Numa warrants that the Product will be new and free from defects in material and workmanship under normal use as contemplated by this Contract for a period of one (1) month from the date of shipment.

Except for the foregoing warranty, Numa disclaims all warranties and representations wherever made, including warranties of merchantability, durability, length of service, or fitness for a particular purpose.

Any alteration or modification of the original product without the express written consent of Numa will void the warranty.

REMEDY

If, during such warranty period, Buyer promptly notifies Numa in writing of any defect and establishes that the above warranty is not met, Numa shall either repair or replace the Product or credit the customer, as it deems necessary to meet the warranty.

Such repair, replacement, or credit of Product shall constitute complete fulfillment of Numa's obligation under this warranty, and upon the expiration of the original warranty period, all of Numa's obligations hereunder shall terminate.

LIMITATION OF LIABILITY

Numa shall not be liable to Buyer whether in contract, in tort (including negligence and strict liability), under any warranty or otherwise, for any special, indirect, incidental or consequential loss or damage whatsoever, including (without limitation) loss arising from delay, cost or capital and loss of profits or revenues. The remedies set forth in this Contract are exclusive, and the total cumulative liability of Numa under this Contract or for any act or omission in connection therewith or related thereto, whether in contract, in tort (including negligence and strict liability), under any warranty or otherwise, is limited to the price paid by Buyer for the Product.

The *WARNINGS*, *CAUTIONS* and *NOTES* used throughout the text of this instruction book are defined as follows:

WARNING	A specific procedure or practice that must be strictly followed, or a specific condition that must be met, to prevent possible bodily harm.
CAUTION	A specific procedure or practice that must be strictly followed, or a specific condition that must be met, to prevent damage to the equipment.
NOTE	Important supplemental information.

SECTION I
DESCRIPTION

GENERAL DESCRIPTION

NUMA Pneumatic Lubricators are positive displacement air operated lubrication systems. We offer a 5 gallon (19 liter) lubricator. Please contact your NUMA representative for other sizes or to discuss your custom requirements.

These Lubricators are designed to inject lubricants into airlines under positive pressure, to lubricate pneumatically operated tools. The design includes a lubricant tank, a pneumatically operated lubricant pump, a supply side air filter and regulator, and various connection lines, output lines and check valve.

Single pump Lubricators are capable of pumping up to 16 quarts (11.4 liters) per hour @1500 psi (103 Bar). They are adjustable for output pressures from 265 psi (18 Bar) to 1500 psi (103 Bar), and output volumes from .25 to 16 quarts per hour (.24 to 11.4 liters per hour). Required supply air pressure is from 15 to 85 psi (1 to 6 Bar). The supply to output pressure ratio is 17.6:1. The pump is adjustable for stroke length, and the number of strokes per minute.

SECTION I
STARTUP CHECK LIST

- ☐ Fill Tank. This should be done at the beginning of each shift and checked periodically throughout the day.
- ☐ Turn the knob on the pressure regulator counter clockwise two full turns.
- ☐ Connect air hoses to manifold. Reference arrow on manifold for proper air flow. Make sure to install proper whip checks. Turn on air supply at compressor(s).
- ☐ Slowly open air supply valve located on the manifold.
- ☐ Turn the pressure regulator clockwise until the pressure gage registers between 75 psi min and 85 psi max. This controls the pressure being supplied to the lubricator pump.
- ☐ Open bleeder valve on left side of pump to prime it. Allow pump to operate until fluid without bubbles is discharged. Close bleeder valve.
- ☐ Check that the supply line regulator is set at 85 psi max. This will feed the air into the pump.
- ☐ Reference the rock drill oil consumption chart located on top of the lubricator. Match the hammer size to proper injection rate. Adjust if needed.
- ☐ As all down hole hammers require a continuous supply of rock drill oil, place a piece of plywood below the surface of the bit face until lubricant is visible on the plywood surface. The pump should be checked multiple times per shift to insure that it is operating properly. If the pump is not operating properly, immediately cease hammer operation. Failure to lubricate the hammer can cause piston failure.
- ☐ Periodically check that all fittings are tight and hoses are in proper working condition with no visible defects.
- ☐ To keep the pump properly lubricated, periodically tighten the grease jack assembly. It is located on the right hand side of the pump. Refill as necessary.

SECTION II
FUNCTIONAL DESCRIPTION

Lubricator Tank

The Lubricator Tank is prefabricated plastic.

Regulator

A pressure regulator is fitted at the upstream end of the assembly. This regulator must be set between 75 psi (5 Bar) and 85 psi (6 Bar). The regulator protects the lubrication pump and filter from damage due to over pressurization.

Filter

The filter is fitted downstream from the regulator. This filter removes moisture and particulate that can damage the pump. The filter is provided with a drain to eliminate moisture and particulate filtered out of the supply air.

Manifold

The 5 Gallon Lubricator is equipped with a 2 inch manifold through which operating air is routed. The lubricator pump supply air and the high pressure lubricant feed return are both ported into this manifold. Each end of the manifold has a 2 inch male boss connection, so that 2 inch air hose can be connected through the manifold. The manifold also has 4 each 1/4 NPT ports. Two of these are used for the lubricator air supply and lubricant return. The other two ports are auxiliary.

Lubricator Pump

The Lubricator Pump is a pneumatically operated positive displacement fluid pump. It is manufactured from 300 series stainless steel, and is adjustable for stroke length and strokes per minute. Output pressure is directly proportional to supply pressure at a ratio of 17.6:1. [Supply pressure of 85 psi (6 Bar) gives an actual output pressure of 85 psi (6 Bar) X 17.6 = 1496 psi (103 Bar)].

SECTION III
OPERATION

Start Up

Once the tank has been filled with Lubricant, open the bleeder valve on the pump to prime it. Allow the pump to operate until clear fluid, without bubbles, is discharged, and then close the bleeder valve for normal operation.

The pump can be primed sooner if the bleeder valve is loosened one turn before starting the pump. An oil can may be used to force some of the same fluid that to be pumped into the bleeder valve hole. Tighten the bleeder valve and prime the pump as above.

Refer to the STROKES / QUARTS chart for the injection rate required, and adjust the rate per minutes knob to the desired strokes per minute, by turning the knob counterclockwise to increase, and clockwise to decrease. The stroke length adjustment screw can also be used to control the amount of fluid injected.

The pump parts are subject to normal wear, and should be inspected and replaced as needed. The exploded view of the pump shows the relationship of the parts, and how they fit together.

TIMER ADUSTMENT

Timer adjustment may be necessary in the field to allow for actual temperature or pressure differences. The adjustment can be done easily by loosening the set screw of the adjustment knob and removing it from the needle valve shaft. With the supply pressure plumbed to the inlet, and the bleeding of the fluid side of the pump complete, turn the needle valve shaft counterclockwise with your fingers to the desired strokes per minute. Once you are satisfied with the strokes per minute, reinstall the adjustment knob on the needle shaft.

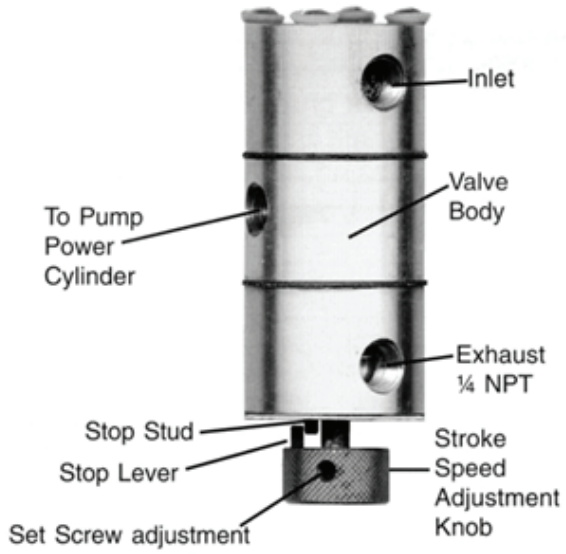

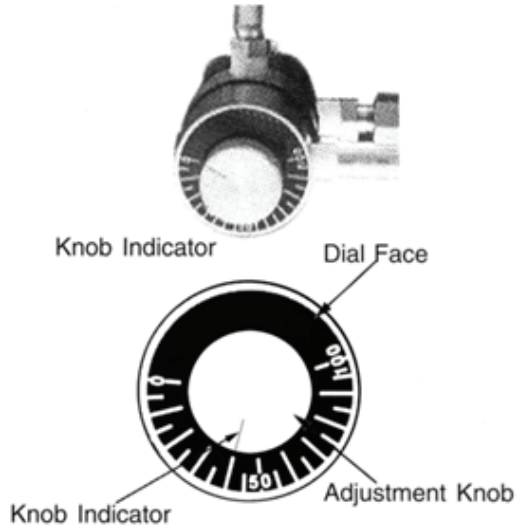

SECTION III
OPERATION

Connections

The NUMA Lubricator comes completely connected internally. Only the supply air inlet and outlet need to be connected in the field. The inlet connection of the Manifold (supply air inlet) is 2-1/2-8 NPS Male Boss. This requires a simple connection to the available supply air via a 2 inch air hose. The air outlet connection at the other end of the manifold is also 2-1/2-8 NPS Male Boss.

WARNING
All connections made after the pump outlet, must have at least a 1500 psi (103 Bar) pressure capacity.

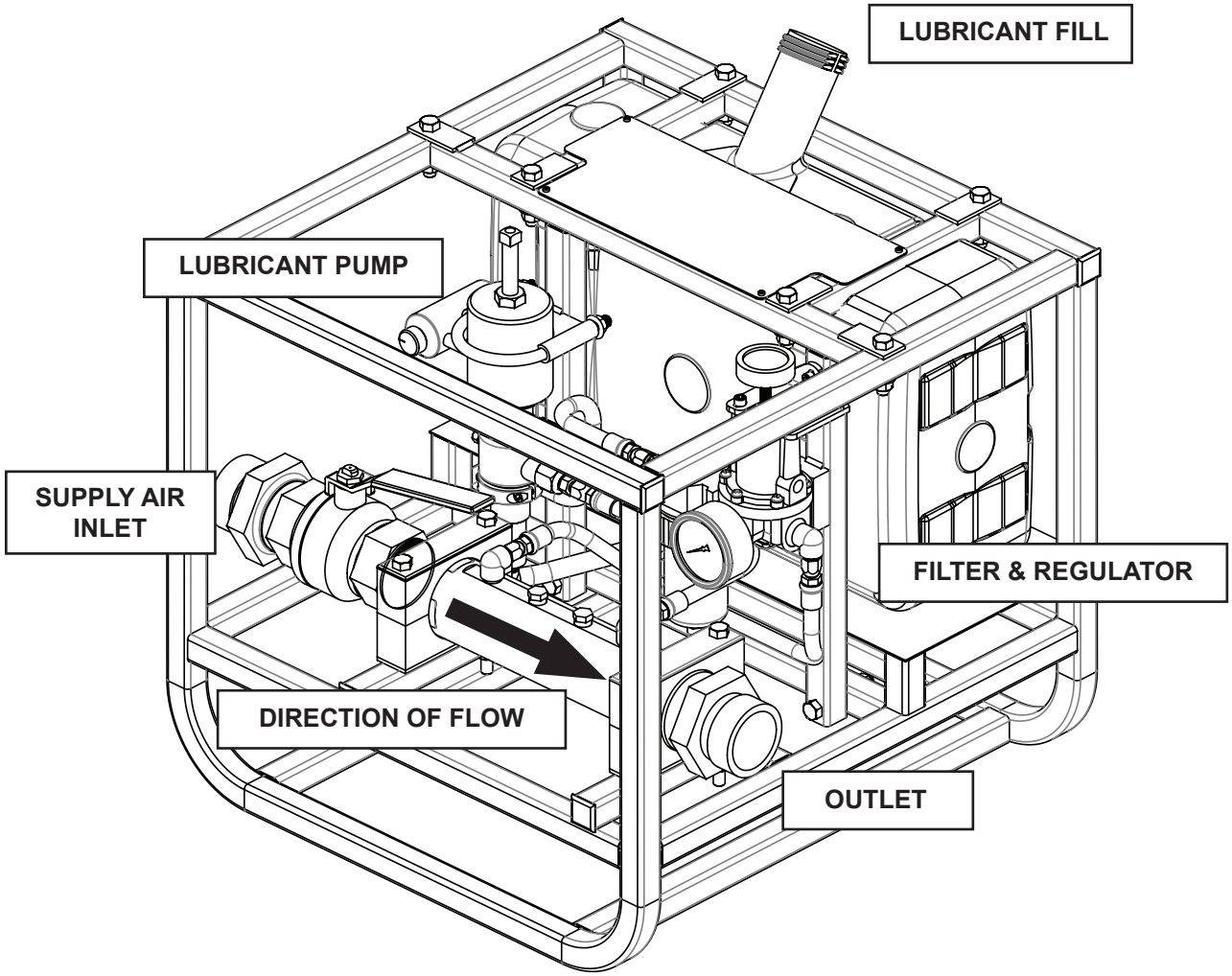

SECTION III
OPERATION

Performance Specifications

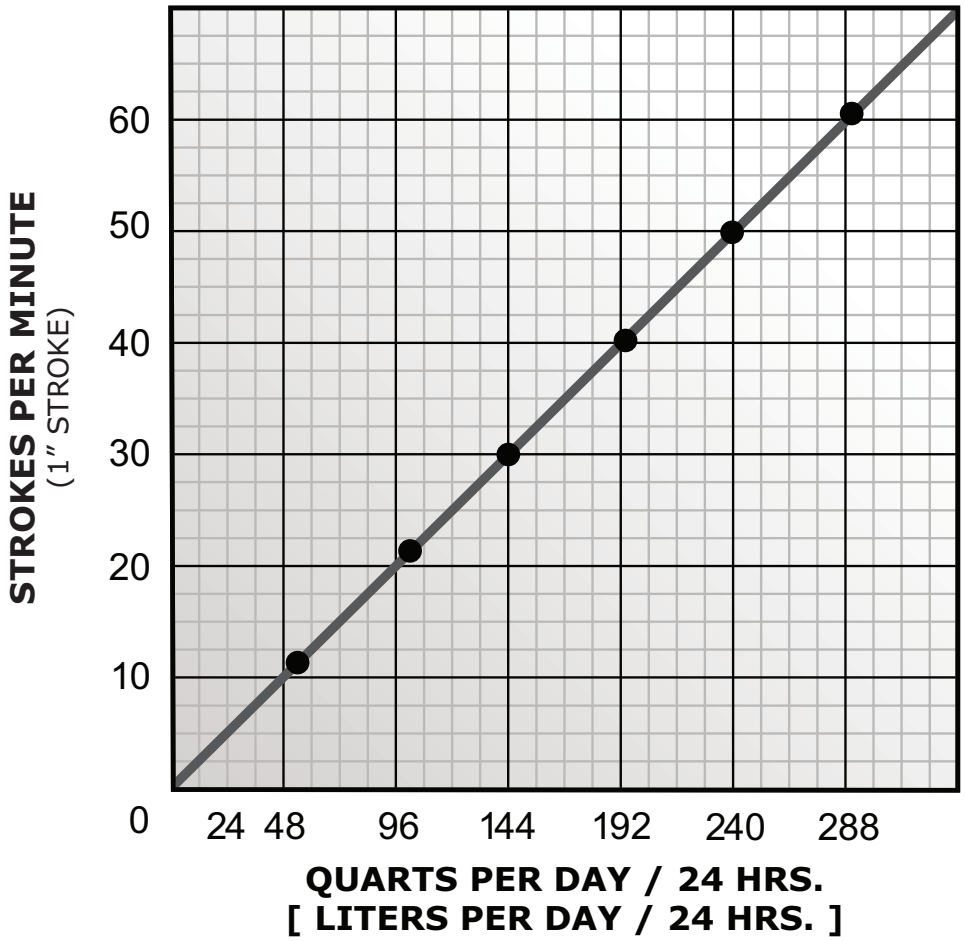

SUPPLY PRESSURE	DISCHARGE PRESSURE	RATIO
15-75 PSI (1-6 BAR)	1500 PSI (103 BAR) MAX	17.6:1

SECTION III
OPERATION

Performance Specifications

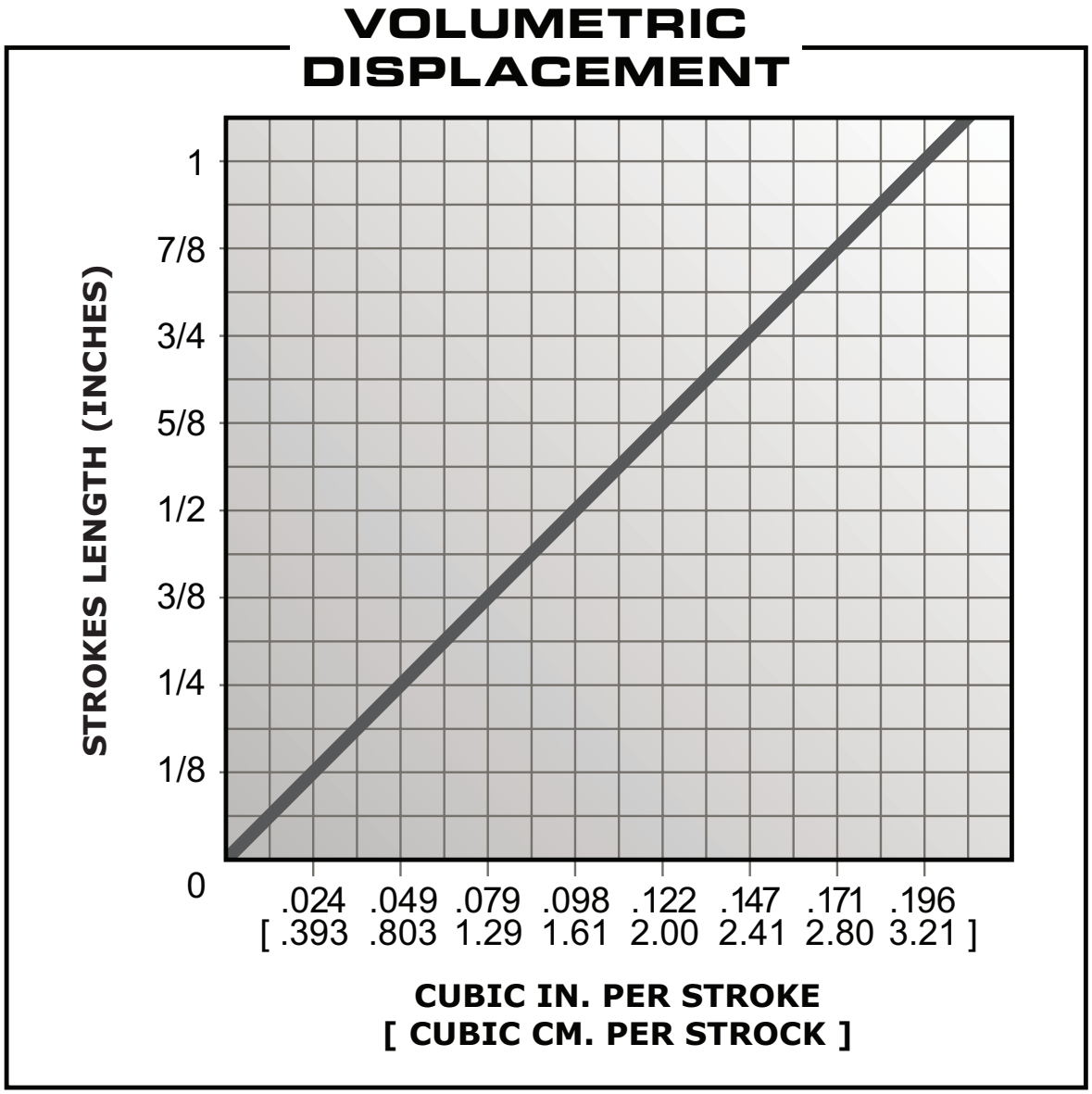

SECTION III
OPERATION

FLUID OUTPUT TABLE
FLUID OUTPUT AT VARIOUS STROKES PER MINUTE

@ 85 PSI (6 BAR) SUPPLY PRESSURE

STROKES PER MINUTE @ 1 INCH STROKE	QUARTS / HOUR	LITERS / HOUR
10	2	1.9
20	4	3.8
30	6	5.7
40	8	7.5
50	10	9.5
60	12	11.4
70	14	13.2
80	16	15.2

SECTION IV
MAINTENANCE

The lubricator should be inspected on a regular basis, for damage, leaks, and normal wear. Leaks in the system should be fixed immediately, as they not only cause the loss of lubricant, they can also allow foreign materials to enter the tank. Leaks in the fittings or hoses can be repaired either by checking that the fittings are tightened to the proper torque, or replacing the leaking component(s).

Leaks in the tank itself or the pump, should be referred to NUMA for evaluation and possible repair. Seals and o-rings will need to be replaced at a regular interval, as they wear.

Regularly check that the supply line regulator is set for a maximum of 85 psi (6 Bar), and that the gage is operating properly.

SECTION V
PARTS IDENTIFICATION
MANIFOLD

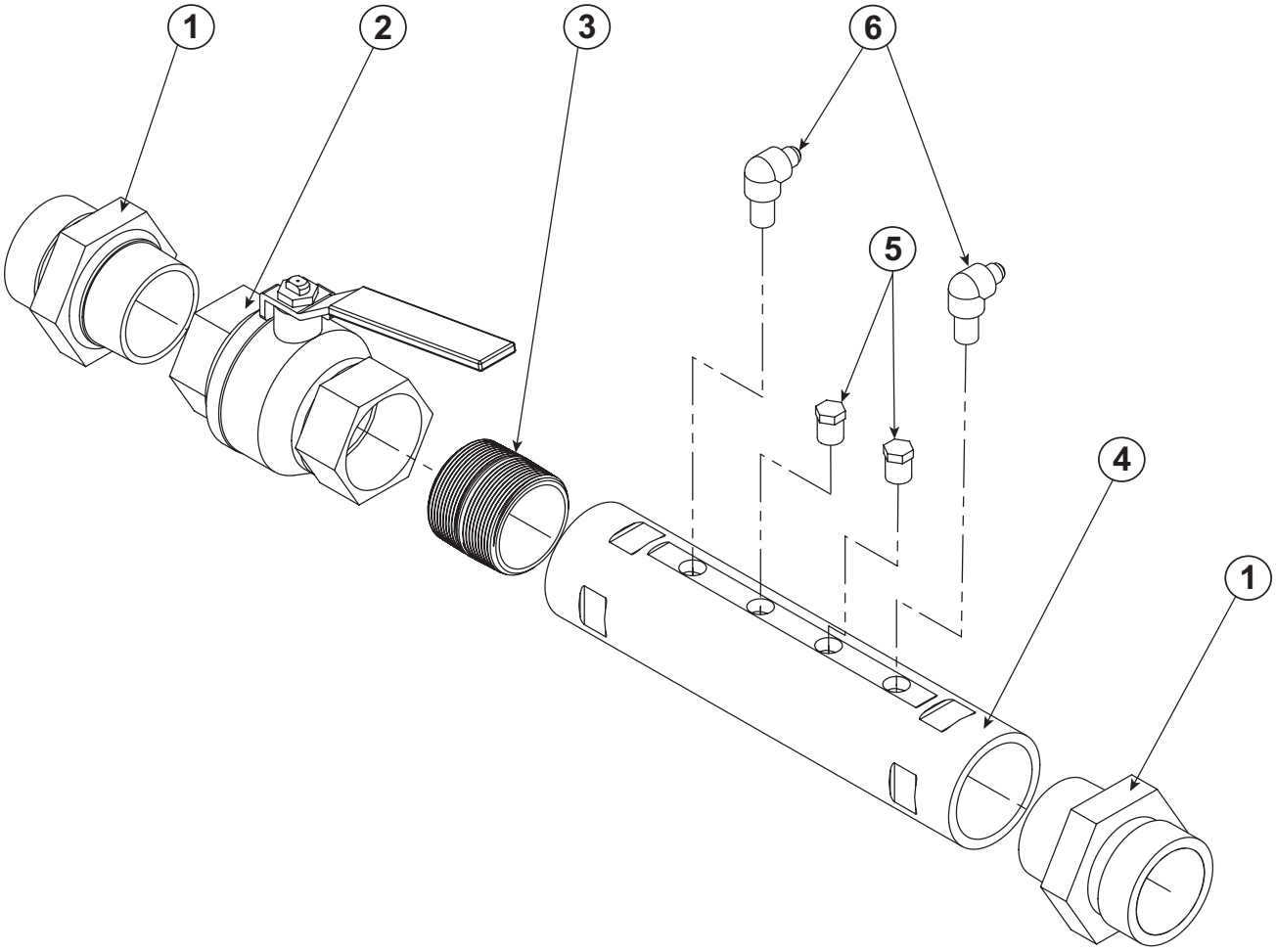

REF	PART NUMBER	DESCRIPTION	QTY.
1	002825	BOSS MALE SPUD 2-1/2 - 8 NPSM X 2 - 11-1/2 NPT	2
2	002817	BALL VALVE FULL PORT 2" STAINLESS	1
3	002815	NIPPLE CLOSE 2 NPT X 2" STAINLESS	1
4	018650	MANIFOLD	1
5	002823	HEX PIPE PLUG 1/4 NPT	2
6	002813	ELBOW 1/4 NPT X 1/4 JIC 90°	2

SECTION V
PARTS IDENTIFICATION
LUBRICATOR PUMP SYSTEM

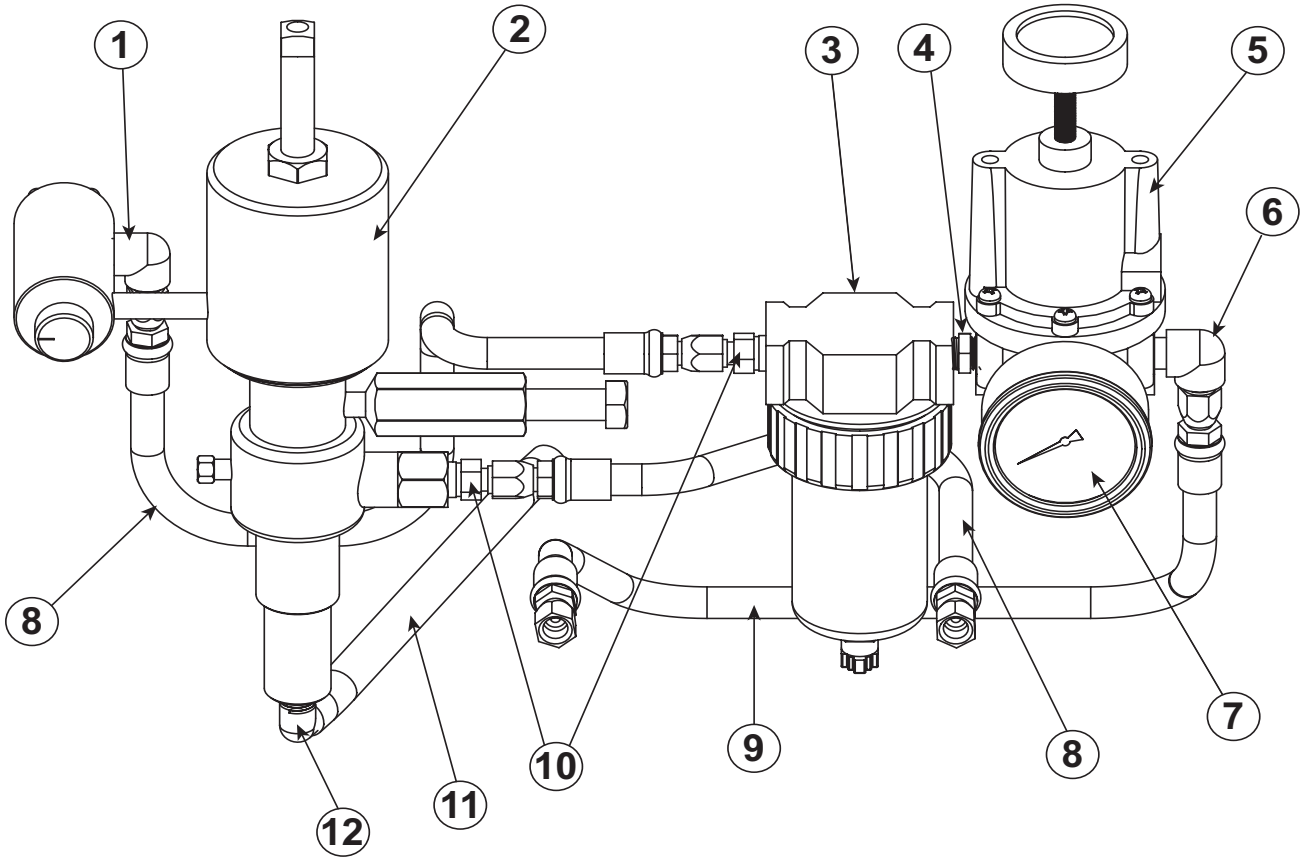

REF	PART NUMBER	DESCRIPTION	QTY.
1	002772	ELBOW 90° -4 JIC MALE X 1/8 NPT MALE	1
2	003796	POSITIVE DISPLACEMENT PUMP	1
3	003214	AIR FILTER 1/4 NPT	1
4	003785	NIPPLE HEX 1/4 NPT BRASS	2
5	003431	AIR PRESSURE REGULATOR	1
6	002813	ELBOW 90° -4 JIC MALE X 1/4 NPTF MALE	1
7	002814	PRESSURE GAGE 0-500 PSI	1
8	002794	HIGH PRESSURE HOSE -4 JIC FEMALE X 14”	2
9	002793	HIGH PRESSURE HOSE -4 JIC FEMALE X 19”	1
10	003750	CONNECTOR -4 JIC MALE X 1/4 NPT MALE BRASS	2
11	002777	HOSE 3/8 X 8”	1
12	002816	ELBOW 90° 1/4 NPT MALE X 3/8 HOSE BARB	1

SECTION V
PARTS IDENTIFICATION
LUBRICATOR PUMP EXPLODED VIEW

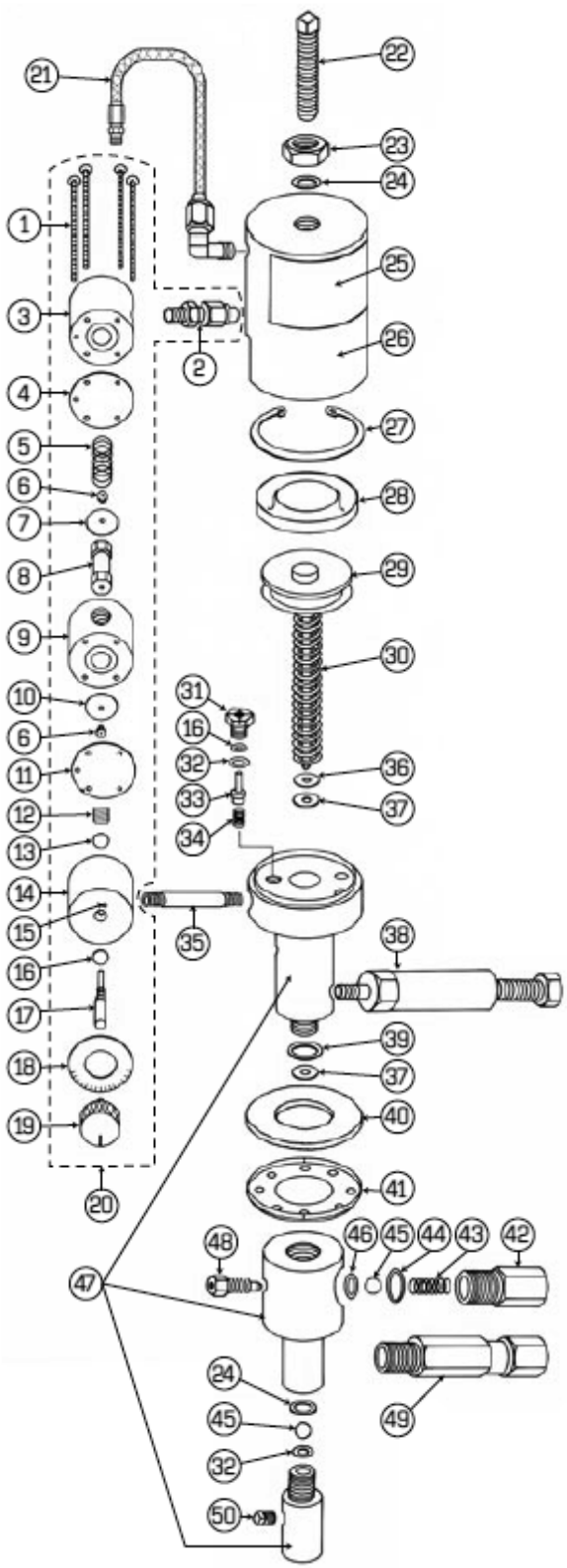

REF	DESCRIPTION	PART NUMBER
1	Capscrew	ASA-5008-BA
2	Connector	ASA-5011-BA
3	Upper Housing	ASA-5033-BA
4	Gasket	ASA-5020-BA
5	Spring, Spool Valve	ASA-5005-BA
6	Screw	ASA-5045-BA
7	Spool Valve End Plate	ASA-5040-BA
8	Spool Valve Body	ASA-5038-BA
9	Center Housing	ASA-5036-BA
10	Spool Valve End-Dia	ASA-5039-BA
11	Diaphragm	ASA-5003-BA
12	Set Screw	ASA-5037-1A-BA
13	O-Ring	ASA-5010-BA
14	Needle Valve Hsg w/ Needle	ASA-5037-A-BA-A
15	Roll Pin	41A-1/8X3/8
16	O-Ring	ASA-5013-BA
17	Needle Valve NSS	ASA-5041-A-BA
18	Dial face	ASA-5043-BA
19	Knob	ASA-5042-BA
20	Timer Assembly	ASA-5076-BA
21	Cyl. Timer Hose	ASA-5112-BA
22	Screw, Stroke Adjustment	ASA-5022-BA
23	Jam Nut	ASA-5023-BA
24	O-Ring	ASA-2184
25	Front Name Plate	ASA-DECAL
26	Cylinder	ASA-5025-BA
27	Retaining Ring	11A-N5002-244
28	U-Cup	ASA-5000-BA
29	Piston & Plunger Assembly	ASA-5063-BA
30	Piston Spring	ASA-5062-BA
31	Exhaust Valve Body	ASA-5030-BA
32	O-Ring	ASA-5014-BA
33	Exhaust Valve Actuator	ASA-5031-BA
34	Exhaust Valve Spring	ASA-5004-BA
35	Pipe Nipple 1/8 x 2	ASA-5009-BA
36	Packing Retainer	ASA-5061-BA
37	O-Ring w/ Polypak	ASA-5065-BA
38	Grease Jack Assembly	ASA-558
39	O-Ring	ASA-5060-BA
40	Filter	ASA-5057-BA
41	Filter Cap	ASA-5056-BA
42	Check Vlv Body, Discharge	ASA-5027-BA
43	Check Valve Spring	ASA-5006-BA
44	O-Ring	ASA-5016-BA
45	SS Ball, 3/8	ASA-54
46	O-Ring	ASA-5018-BA
47	Center Lower Hsg Assembly	ASA-5064-BA
48	Bleeder Valve	ASA-5032-BA
49	SS Line Check	ASA-675
50	Pipe Plug	ASA-5053-BA

SECTION V
PARTS IDENTIFICATION
LUBRICATOR FRAME EXPLODED VIEW

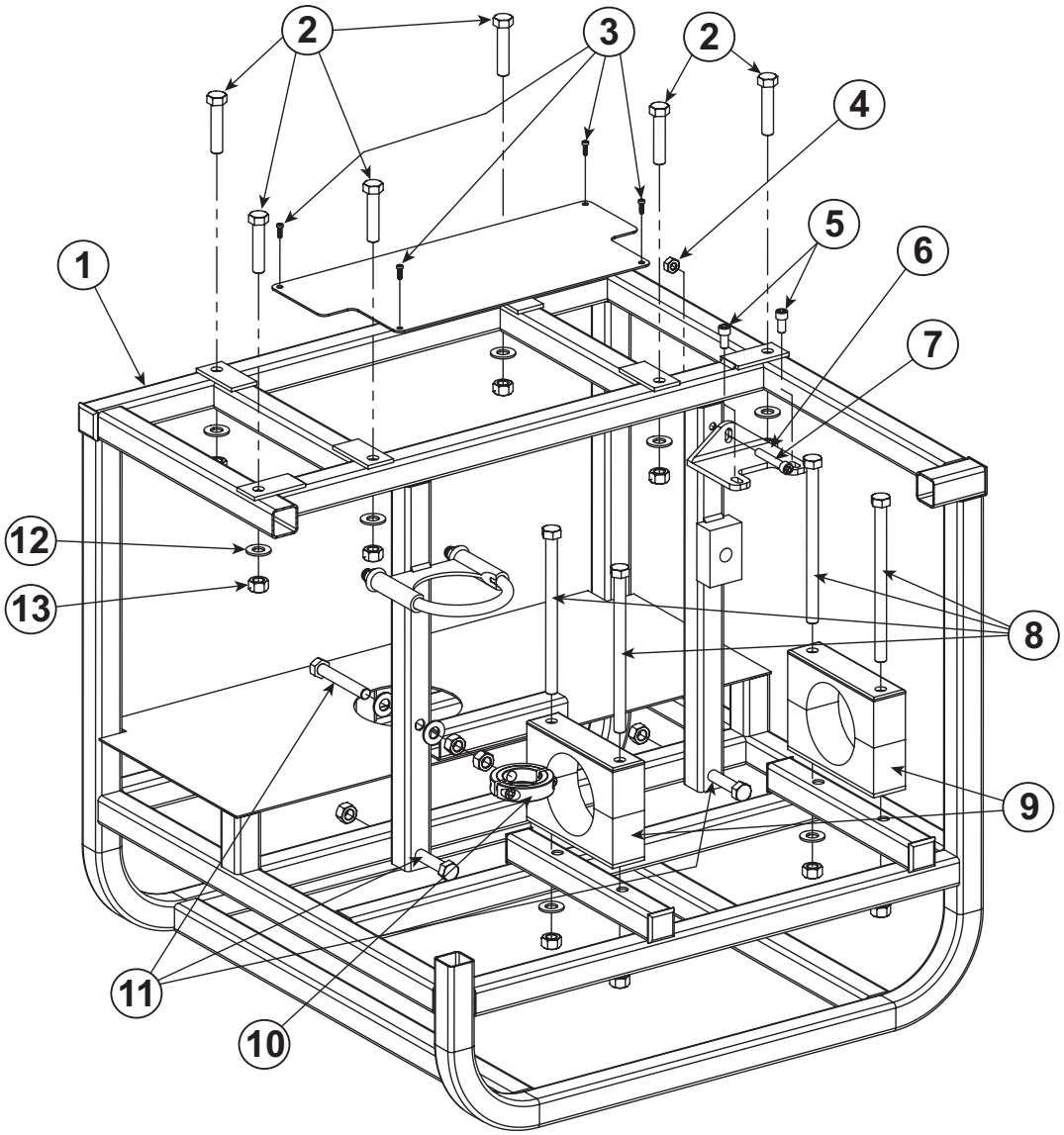

REF	PART NUMBER	DESCRIPTION	QTY.
1	018655	FRAME	1
2	002808	HEX BOLT 3/8 - 24 X 1-3/4	6
3	002796	SELF TAPPING SCREW #5 X 3/8	4
4	010568	HEX NUT 3/8 - 20	1
5	002800	SOCKET HEAD SCREW 1/4 -20 X 1/2	2
6	018666	REGULATOR BRACKET	1
7	002799	SOCKET HEAD SCREW 1/4 - 20 X 1-1/2	1

REF	PART NUMBER	DESCRIPTION	QTY.
8	002804	HEX BOLT 3/8 - 24 X 5-1/2	4
9	002811	MANIFOLD MOUNT	2
10	018658	PUMP BOTTOM CLAMP	1
11	002805	HEX BOLT 3/8 - 24 X 2-1/2	3
12*	002806	FLAT WASHER 3/8	12
13*	002807	HEX NUT 3/8 - 24	14
*	002820	TANK	1

NOTE: * NOT ALL OCCURENCES OF PART ARE DENOTED IN DRAWING.
FRAME IS SECTIONED IN THREE PLACES TO ALLOW COMPONENT TO BE VIEWED.

NOTES